Scolmore GROUP

DRAWN 22.06.2021 BY RKT

STOCK CODE A1

PC2633

Barcode **5056313240492**

CABLE REQUIREMENTS:

Colour: BLACK

Type: 3 Core 1.50mm^2 H05VV-F (European Approved)

Conductor Colour Codes:

Earth (Green & Yellow)

Neutral (Blue)

Live (Brown

Complete Powerlead Rated: 16A/250V

PLUG / END A REQUIREMENTS:

Type: SW927

Colour: BLACK

Rating: 16A

Reference: C20 Connector (European Approved)

CONNECTOR / END B REQUIREMENTS:

Type: SW920

Colour: BLACK

Rating: 16A

Reference: C19 IEC Lock Connector (European Approved)

IEC LOCK

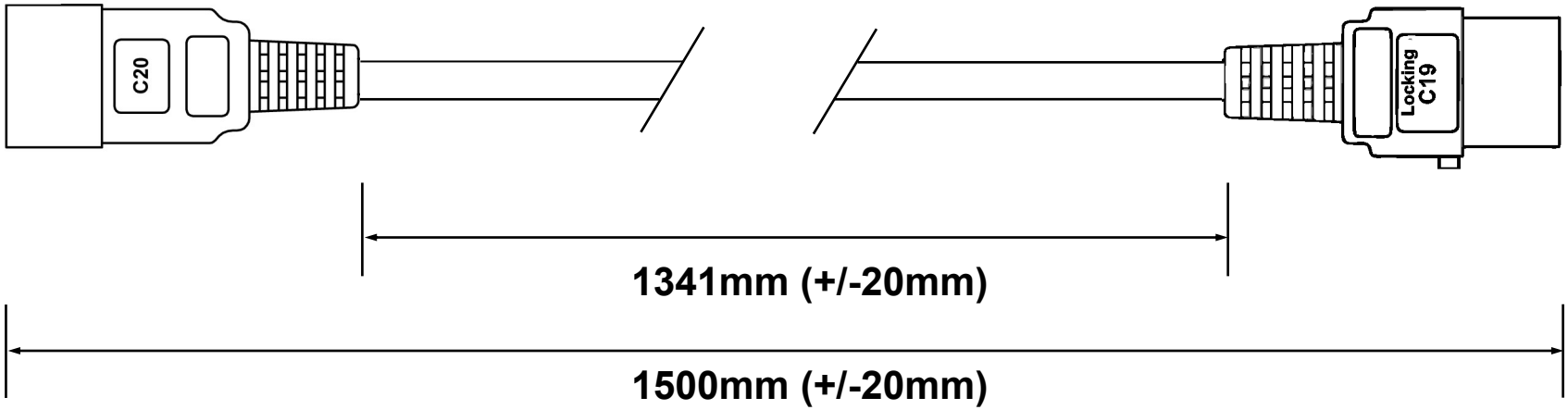

EXTRA REQUIREMENTS:

PACKAGING OUTER .....TBC

PIN PROTECTING COVER .....NO

WIRING INSTRUCTIONS .....NO

PRE-SHIPMENT INSPECTION REQUIRED....NO

COMMENTS:

CHANGE MANAGEMENT:

HANKING

Loose

TERMINATIONS / FURTHER COMMENTS: